90A High Performance Smart Power Stage

1. Description

The MK6840/MK6841 are high-performance Smart Power Stage (SPS) with 90A peak current capability. They contain high-side and low-side N-Channel MOSFETs and a synchronous buck driver IC. The driver IC integrates high accuracy current sense, temperature sense, comprehensive protection mechanism. **The key difference between MK6840/MK6841 is that MK6841 supports double-sided heat dissipation and current conduction.**

The MK6840/MK6841 internal current sense is based on drain source voltage (VDS) of both high-side and low-side MOSFET current, using algorithm with temperature compensation and inductance calibration to achieve superior current sense accuracy and lower propagation delay. Protections include cycle-by-cycle over current protection with programmable thresholds, VCC/VDRV UVLO protection, phase fault detection, IC temperature reporting and thermal shutdown. Operation frequency is up to 1.2MHz at steady state and 4MHz at transient state, providing high performance transient response.

The MK6840/MK6841 are offered in 4mm x 6mm QFN package, which is optimized for high−current application and can greatly reduce parasitic and SW ringing, as well as provide excellent heat transfer path.

2. Typical Applications

- High current, high frequency DC-DC converters
- SPS Modules
- Voltage Regulators for CPUs, GPUs, and DDR memory arrays of Desktop & Notebook Microprocessors
- Routers, Switches and other ASICs

3. Features

- Internal high accuracy and low delay current sense
- 25V(HS)/25V(LS) breakdown voltage of MOSFETs for higher robustness reliability
- Operating frequency up to 1.2MHz for steady state, 4MHz for transient state
- Peak output current capability up to 90A
- Responds properly to Tri-state PWM input
- Precise output current monitoring of 5uA/A
- Precise temperature monitoring of 8mV/℃
- Support switch node fault detection and flag
- Cycle-by-cycle over current protection
- OCP and thermal shutdown with fault flag
- 4mm x 6mm x 0.95mm QFN-34 package
- Catastrophic Fault Detection
  a. Over−temperature Protection
  b. Over-current protection (POCP & NOCP)
  c. UVLO on VCC and VDRV
  d. High-side and low-side MOSFET short
  e. UVLO on BOOT-PHASE

4. Application Diagram

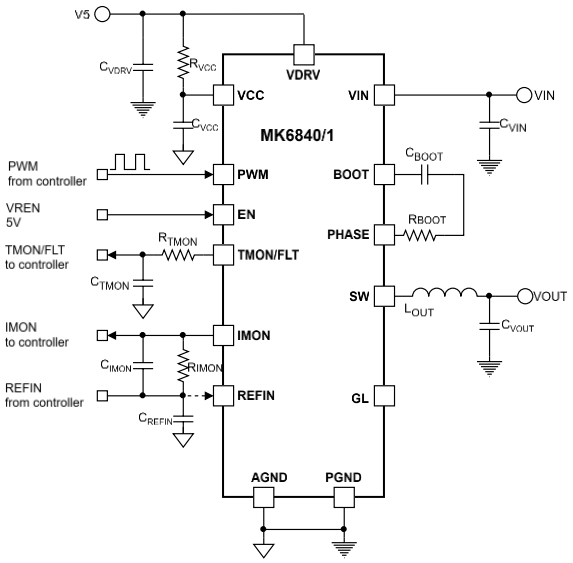

Figure 1. Typical Application Diagram

Meraki confidential only prepared for customer